BlendMount®
Innovative Mounting Solutions

blendmount.com
1-888-497-8388
help@blendmount.com

BV1-2120

INSTALLATION INSTRUCTIONS FOR VALENTINE ONE MOUNT RADAR DETECTORS

LEFT HAND DRIVE VEHICLE

THIS MOUNT MUST BE INSTALLED FROM THE PASSENGER SIDE

Your rear view mirror has minimal clearance between the back side of the mirror and the mirror stem. It is very important that this mount is installed correctly to ensure mirror adjustability is retained.
PLEASE READ THESE INSTRUCTIONS THOROUGHLY BEFORE INSTALLING THIS MOUNT

NOTE: For illustration purposes, the mount and rear view mirror shown in these instructions may look slightly different then YOUR mount and rear view mirror.

7 28028 41117 1

1 Remove the two suction cups that are on your existing V1 Gen1 or Gen 2 windshield mount. The two holes that were used to secure the suction cups are now used to attach the BlendMount.

2 Remove the lock washer and nut from the button head screws and place the BlendMount assembly onto the V1 windshield mount. Re-attach the lock washer and nut and tighten with the supplied allen wrench.

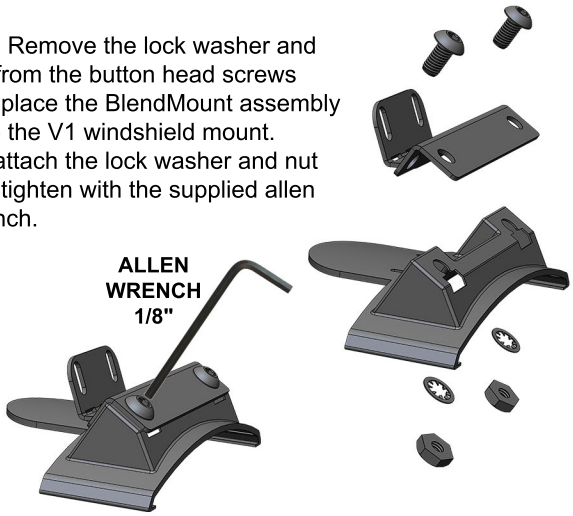

3 Loosen the CLAMP SCREW so the TOP section seperates from the MID section. This will provide the necessary clearance to slide the mount over the mirror stem as shown below. **Adjust the mirror parallel to the windshield and slightly upward for ease of installation.**

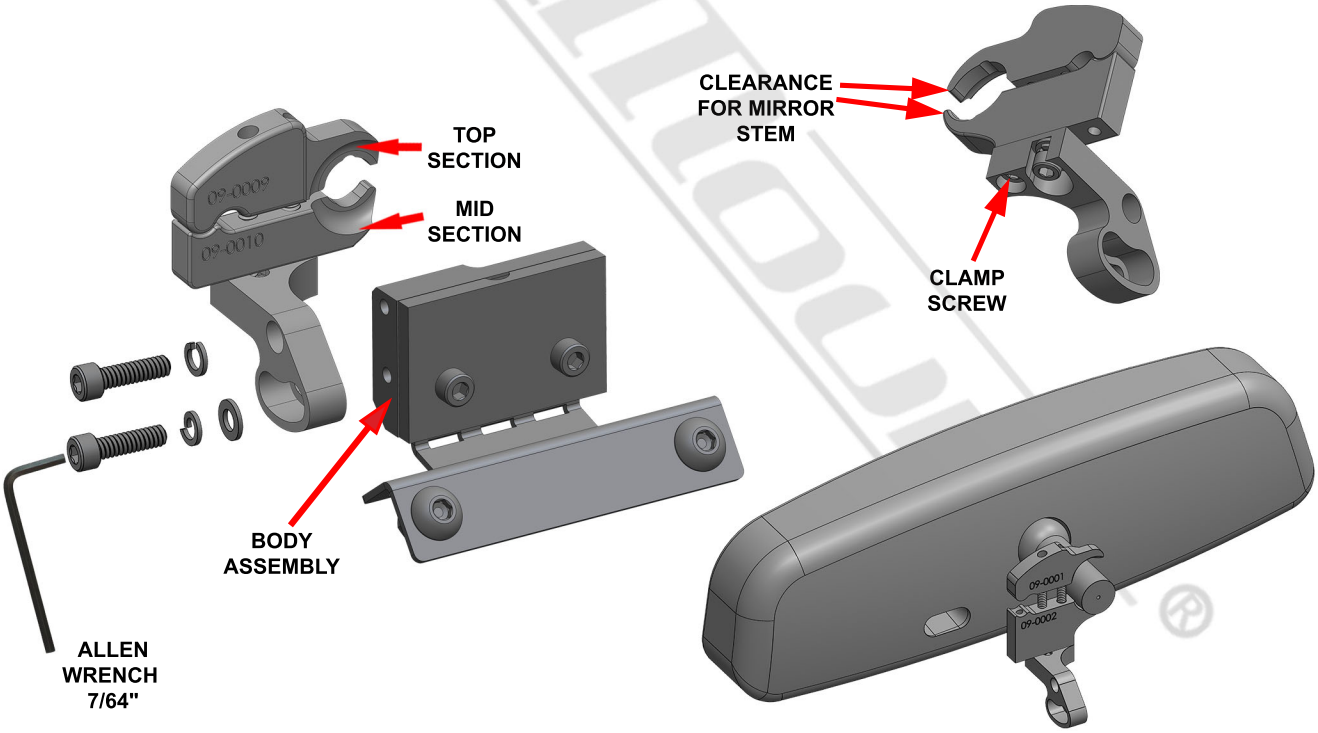

BlendMount®
Innovative Mounting Solutions

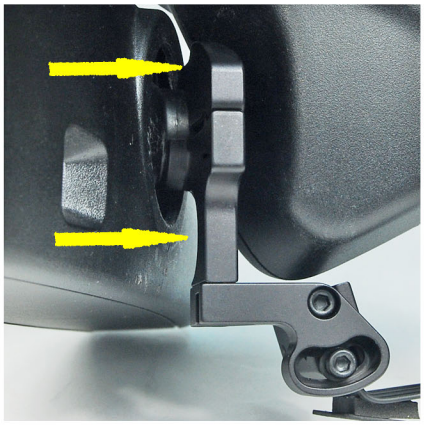

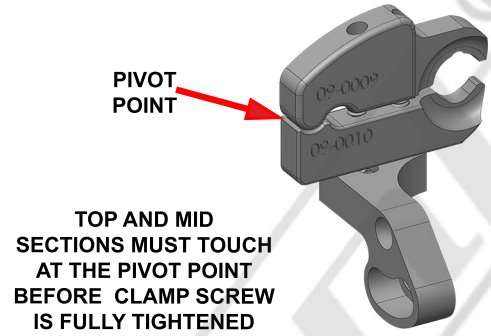

4 While sitting in the passenger seat, place the mount over the mirror stem. Tighten the CLAMP SCREW until the mount starts to clamp onto the mirror stem. Position the mount as far forward as it will go and parallel to the bottom of the mirror before fully tightening.

5 **MAKE SURE THE TOP AND MID SECTIONS ARE TOUCHING AT THE PIVOT POINT**. If you can not get them to touch at the pivot point, you may have an **incompatible mirror type for this mount.**

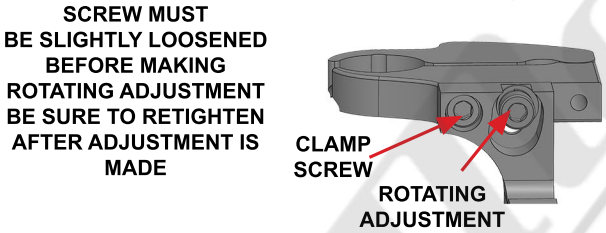

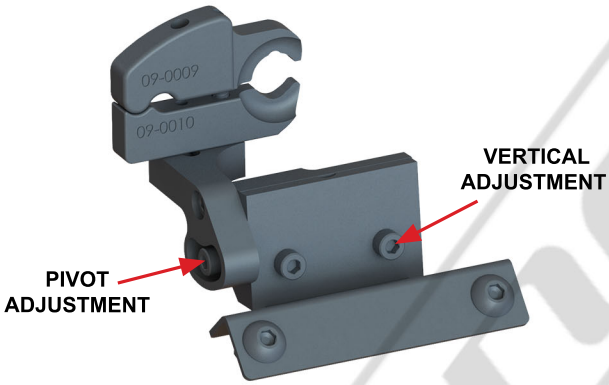

6 Install your radar detector onto the mount. Use the adjustments shown above to adjust the RD to your desired position. We recommend adjusting the RD as close to the bottom of your mirror as you can. Be sure to tighten the vertical and pivot adjustment screws after the adjustments are made. For the Pivot adjustment, grab the long arm of the allen wrench for maximum leverage. You will not strip the threaded holes in the aircraft grade aluminum.

CAUTION

DO NOT use this mount if it interferes with the adjustability or the operation of your rear view mirror in any way.
DO NOT use this mount if the radar detector creates an unsafe viewing obstruction.
DO NOT ATTEMPT TO MODIFY THIS PRODUCT. Consult the manufacturer for assistance.
All BlendMount products are accompanied with detailed installation instructions and adjustment tips. You are encouraged to contact customerservice@blendmount.com or call J28 Design at 1-888-497-8388 for further assistance.

Check the BlendMount Forum for installation tips and some vehicle specific installs.
www.blendmount.com

Your feedback is very important to us. Please email any questions or comments you have to **customerservice@blendmount.com**

J28 DESIGN
Innovative Design And Precision Manufacturing

BlendMount - US PATENT # D625,580 S, D656,811 S, D653,980 S and other patents pending